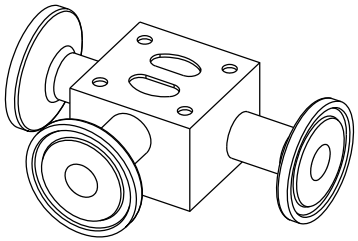

DN10 TO DN15
MAINLINE ONLY

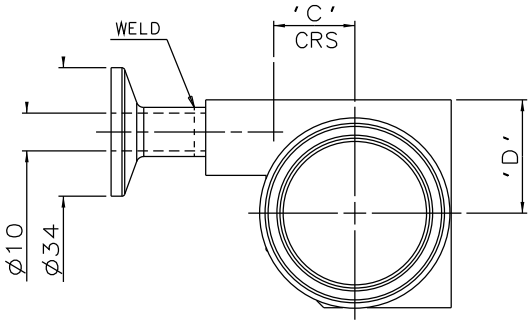

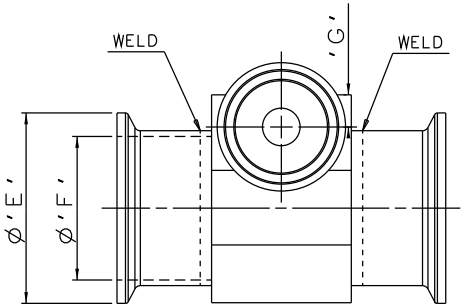

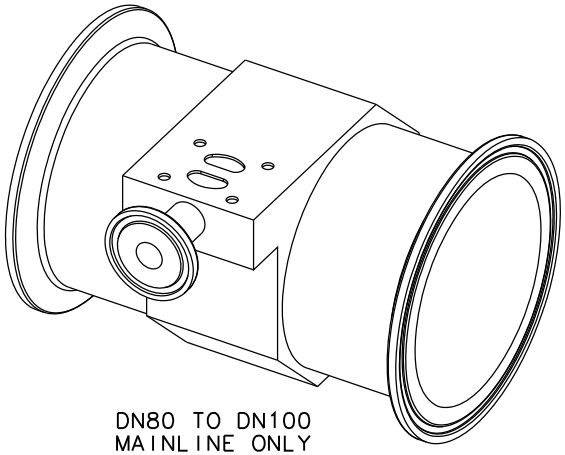

DN80 TO DN100
MAINLINE ONLY

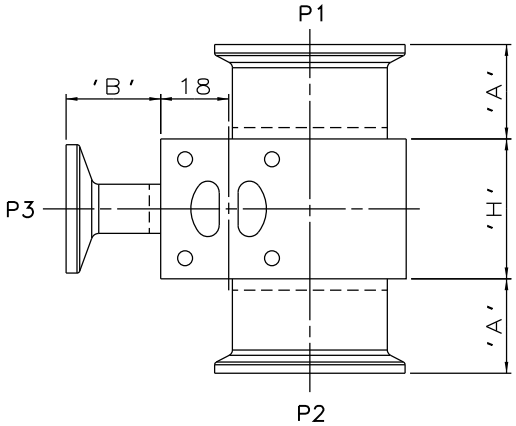

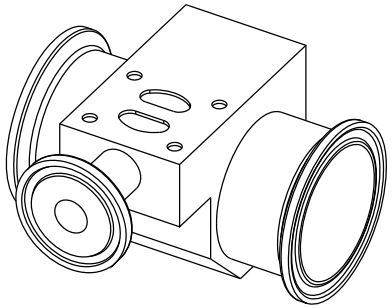

DN20 TO DN65
MAINLINE ONLY

MAINLINE SIZE	A	B	C	D	øE	øF	G	H	BODY WEIGHT
mm	mm	mm	mm	mm	mm	mm	mm	mm	Kgs
DN10 DIN 11850 S2	25.0	25.0	7.5	17.0	34.0	10.0	8.5	37.0	0.4
DN15 DIN 11850 S2	25.0	25.0	10.5	21.0	34.0	16.0	8.5	37.0	0.4
DN20 DIN 11850 S2	25.0	25.0	12.5	23.0	34.0	20.0	8.5	37.0	0.4
DN25 DIN 11850 S2	25.0	25.0	15.5	26.0	50.4	26.0	8.5	37.0	0.5
DN32 DIN 11850 S2	25.0	25.0	18.5	28.0	50.4	32.0	8.5	37.0	0.6
DN40 DIN 11850 S2	25.0	25.0	21.5	30.0	50.4	38.0	8.5	37.0	0.7
DN50 DIN 11850 S2	25.0	25.0	27.5	33.0	63.9	50.0	8.5	37.0	0.8
DN65 DIN 11850 S1	50.0	25.0	35.5	38.0	90.9	66.0	8.5	37.0	1.2
DN80 DIN 11850 S1	50.0	25.0	43.0	46.5	105.9	81.0	8.5	50.5	1.7
DN100 DIN 11850 S1	50.0	25.0	52.5	55.0	118.9	100.0	8.5	50.5	1.9

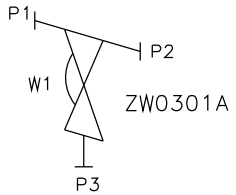

ORIENTATION AS
PER P&ID DIAGRAM
FOR OPTIMUM
DRAINABILITY.

The information on this sheet is Private and Confidential and is the property of Crane Process Flow Technologies Limited and must not be published directly or indirectly in any manner whatsoever without the written permission of the Company and must not be used in any way detrimental to their interests.
© Crane Process Flow Technologies

CRANE Process Flow Technologies
A Crane Co. Company

Saunders The Science Inside

Title

SCHEDULE OF LEADING DIMENSIONS FOR DN8
WEIR 'T' BODY COMPLETE WITH :
MAINLINE : HYGIENIC CLAMP ENDS WITH DIN 11850 S2/S1 BORE
BRANCH : DN10 HYGIENIC CLAMP END WITH DIN 11850 S2 BORE

Drawn RI	Date 02.04.12	UNCONTROLLED IN HARD COPY FORMAT
Checked RND	Date 02.04.12	
First Angle Projection Method E	DO NOT SCALE	Drawing No. WEB-159 / Issue. 1